# RMS-3000 PACKAGE

The RMS 3000 Modular Package comes pre-plumbed and ready to install for your rainwater harvesting project. This package is designed for below-ground installation.

The ***RMS 3000 Modular Package*** includes:

- **WISY WFF150 Vortex Fine Filter** with extension tube, mounted to tank
- Two **1,500-gallon** Roth polyethylene tank with risers, gaskets, manhole covers, fittings necessary to create equalization lines between tanks
- (2) **4" Smoothing Inlet**
- (2) **Multi-function Overflow Device**
- Goulds **1HP Grundfos SBA Pump** with Floating Suction Filter
- **Normally Open float switch** for pump protection
- Necessary bulkheads, and fittings

# Storage Tank

# ROTH MULTITANK®

## NSF 61 CISTERN AND POTABLE WATER TANKS

***Setting the standards for all other tanks. The Roth MultiTank® offers undisputed best-in-class status and the highest brand recognition of any tank in the market. The only tank you will ever need.***

### Environmentally Sound
Watertight, corrosion resistant and FDA approved contruction

### Versatile
Ideal for potable water and other consumable liquids

### Heavy Duty
Designed to perform under tough conditions, can be installed with 6” to 72” of cover (6’) and can be pumped dry

### Code Compliant
NSF/ANSI 61 Certified for potable uses

### Installer Friendly
Easy handling and multi-port inlet/outlet pipe configurations

## KEY FEATURES

**Low-profile high-performance design**

**Compatible with various risers**

**Includes connection gaskets and threaded manhole covers**

**No water required during backfill process**

**Lifetime Corrosion Protection/5 Year Labor Insurance**

**Heaviest poly tank on the market**

**One-Piece Design**

**Roth Global Plastics**
**PO Box 245 Syracuse, NY 13211**
**www.RothMultitank.com**
**866-943-7256**

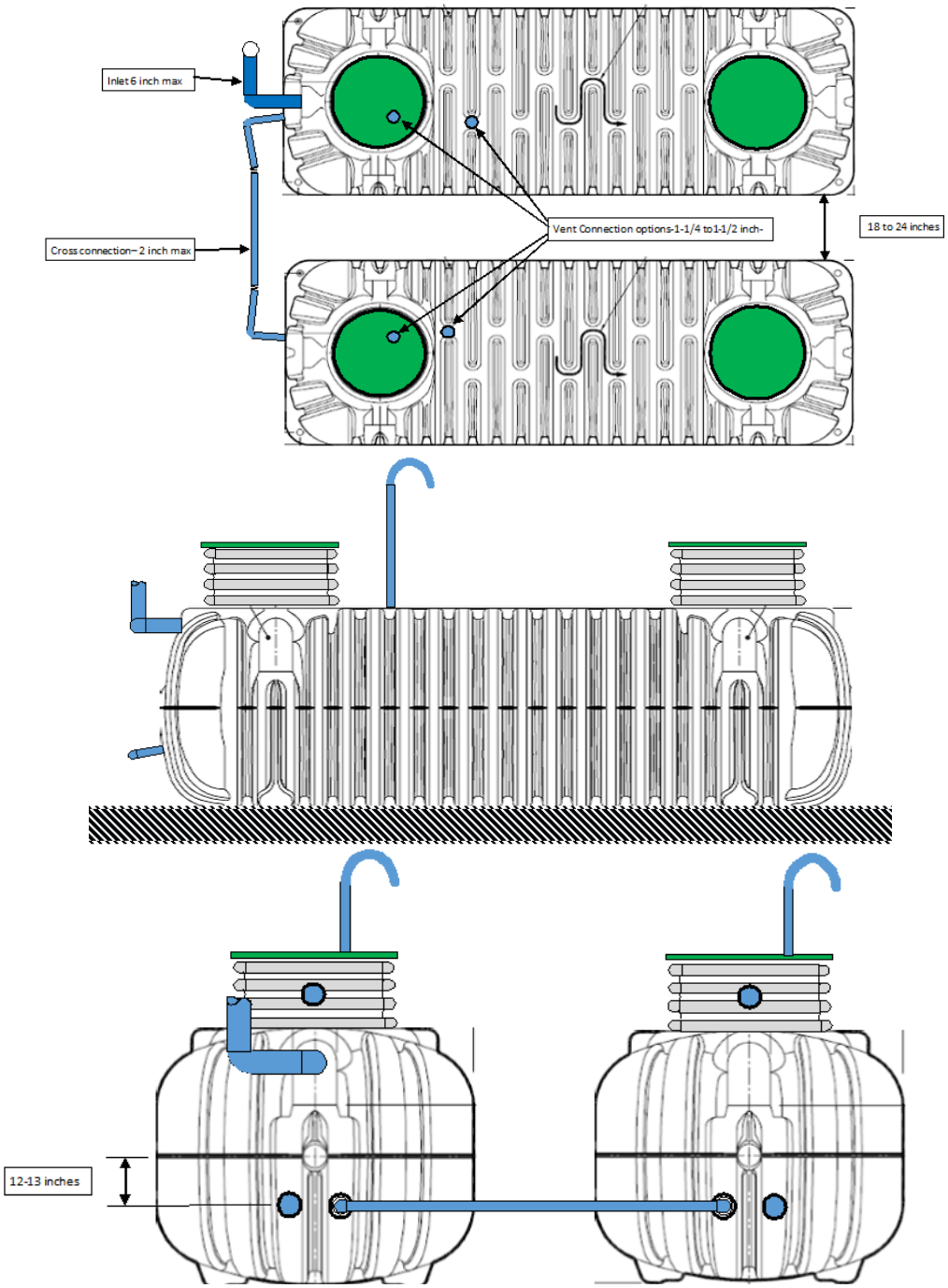


Not all tanks are created equal. Roth's revolutionary process changes everything. State-of-the-art computer controlled multi-layer blow molding process produces perfect parts. Repeatable process, repeatable field performance you can trust.

Our tanks are manufactured by a unique and proprietary blow-molding process resulting in the most structurally sound polyethylene tank on the market.

After decades of conventional technology, Roth brings 40+ years of blow molding experience to the North American market.

## Roth MultiTank® Product Specifications

| MODEL | HEIGHT Inches (mm) | WIDTH Inches (mm) | LENGTH Inches (mm) | WEIGHT Pounds (kilogram) | TANK CAPACITY (gal/litre) 1 Tank | TANK CAPACITY (gal/litre) 2 Tanks | TANK CAPACITY (gal/litre) 3 Tanks |
|---|---|---|---|---|---|---|---|
| RMT-500 | 51 (1295) | 62 (1575) | 60 (1524) | 225 (102) | 535/2025 | 1070/4050 | 1605/6075 |
| RMT-750 | 51 (1295) | 62 (1575) | 103 (2616) | 360 (163) | 1000/3785 | 2000/7570 | 3000/11356 |
| RMT-1000E | 51 (1295) | 62 (1575) | 118 (2997) | 450 (204) | 1147/4394 | 2294/8683 | 3441/13025 |
| RMT-1060 | 51 (1295) | 62 (1575) | 133 (3378) | 520 (236) | 1337/5061 | 2674/10122 | 4011/15183 |
| RMT-1250 | 51 (1295) | 62 (1575) | 148 (3759) | 560 (254) | 1469/5560 | 2938/11121 | 4407/16682 |
| RMT-1500 | 51 (1295) | 62 (1575) | 177 (4496) | 640 (291) | 1771/6703 | 3542/13407 | 5313/20111 |

**Roth Global Plastics PO Box 245 Syracuse, NY 13211**
**www.RothMultitank.com 866-943-7256**

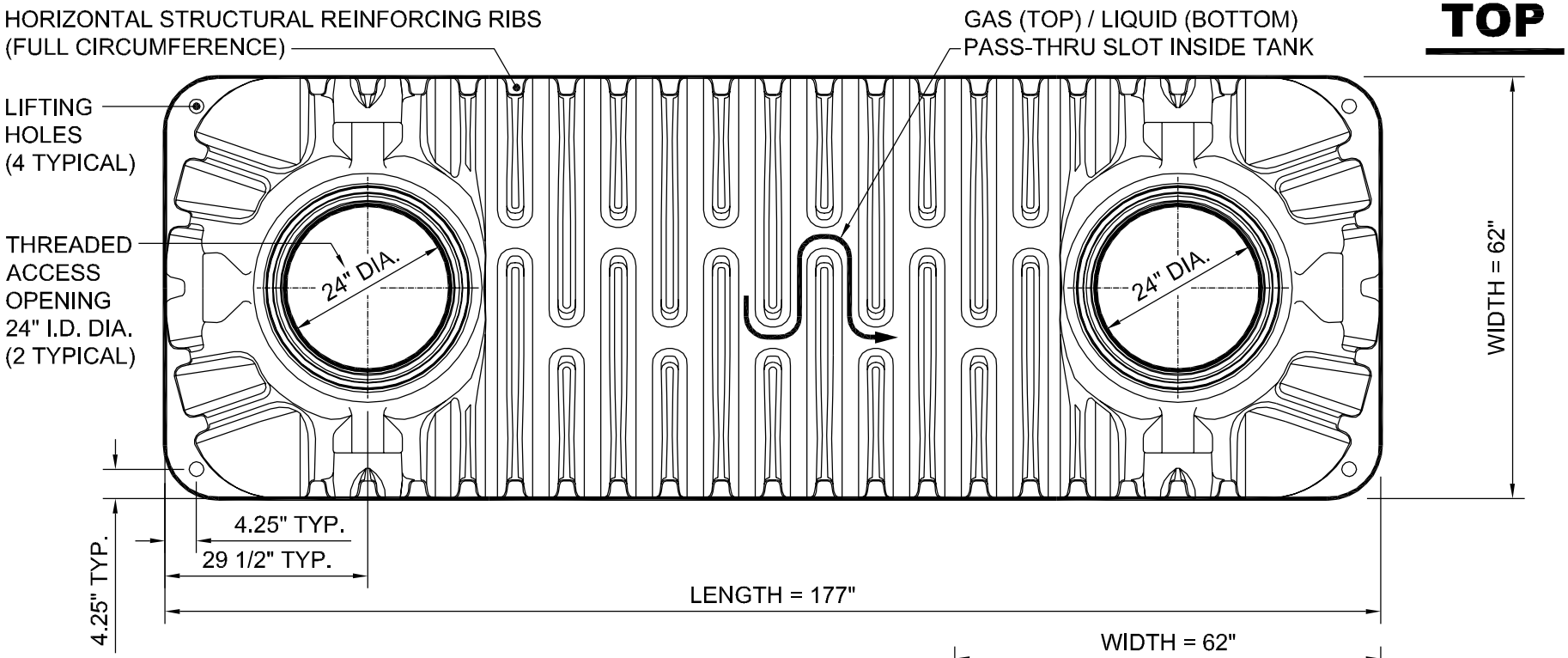


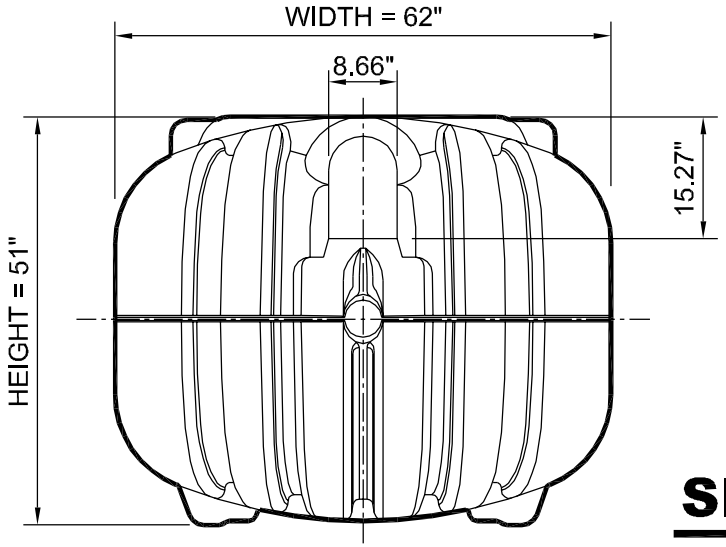


## TANK SPECIFICATIONS

| DESIGN CAPACITY | | TOTAL CAPACITY | | WEIGHT |
|---|---|---|---|---|
| GALLONS | LITERS | GALLONS | LITERS | POUNDS |
| 1500 | 5678 | 1771 | 6692 | 640 |

DWG SCALE: 1:1
PLOT SCALE: 1:2
SHEET #: 1 OF 3

# ROTH MultiTanK®
# 1500 GALLON / MODEL RMT-1500

YOUR ENVIRONMENT IS OUR BUSINESS.

ROTH GLOBAL PLASTICS
One General Motors Drive
Syracuse N.Y. 13206
Call Toll Free 866.943.7256
www.fralo.net

# ELEVATION

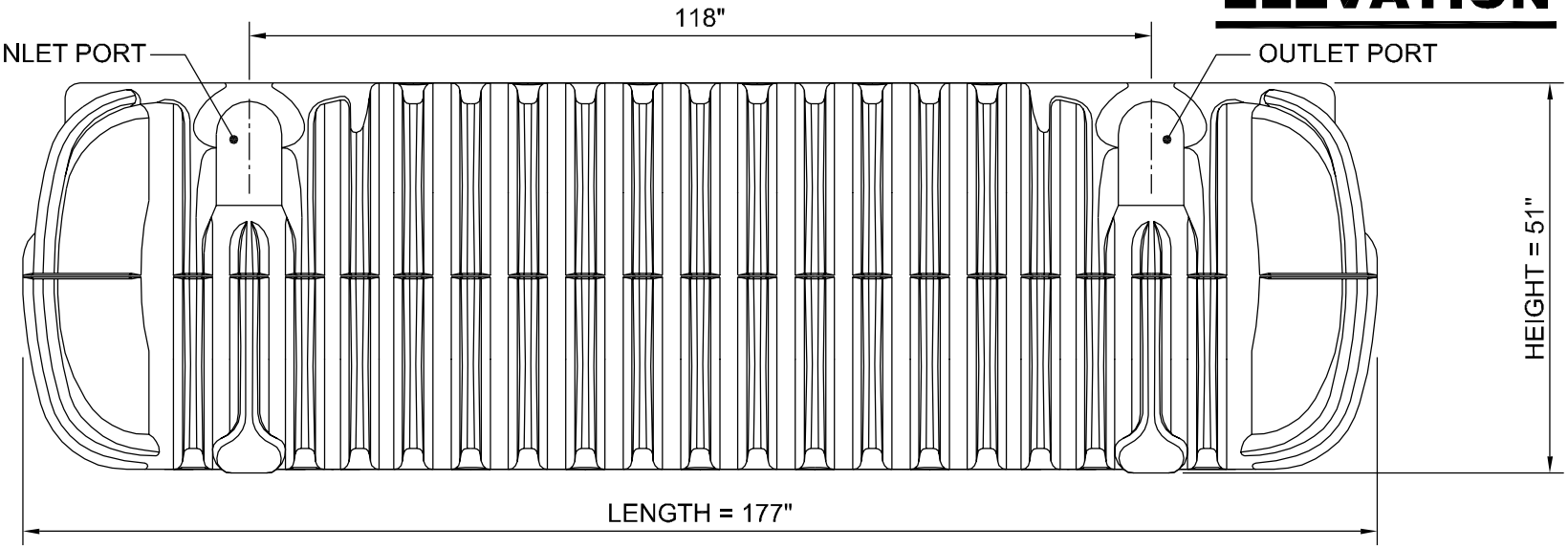


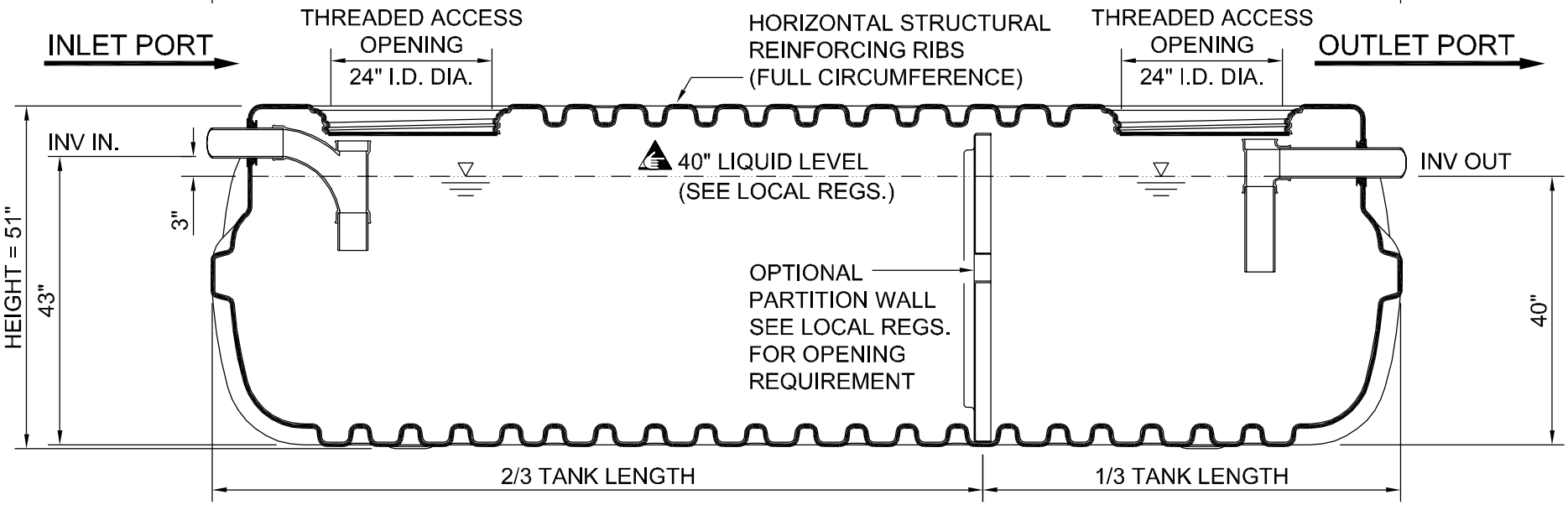


**40" LIQUID LEVEL**

# SECTION

| | |
|---|---|
| DWG SCALE: | 1:1 |
| PLOT SCALE: | 1:2 |
| SHEET #: | 2 OF 3 |

## ROTH MultiTanK®
## 1500 GALLON / MODEL RMT-1500

YOUR ENVIRONMENT IS OUR BUSINESS.

ROTH GLOBAL PLASTICS
One General Motors Drive
Syracuse N.Y. 13206
Call Toll Free 866.943.7256
www.fralo.net

# ISOMETRIC

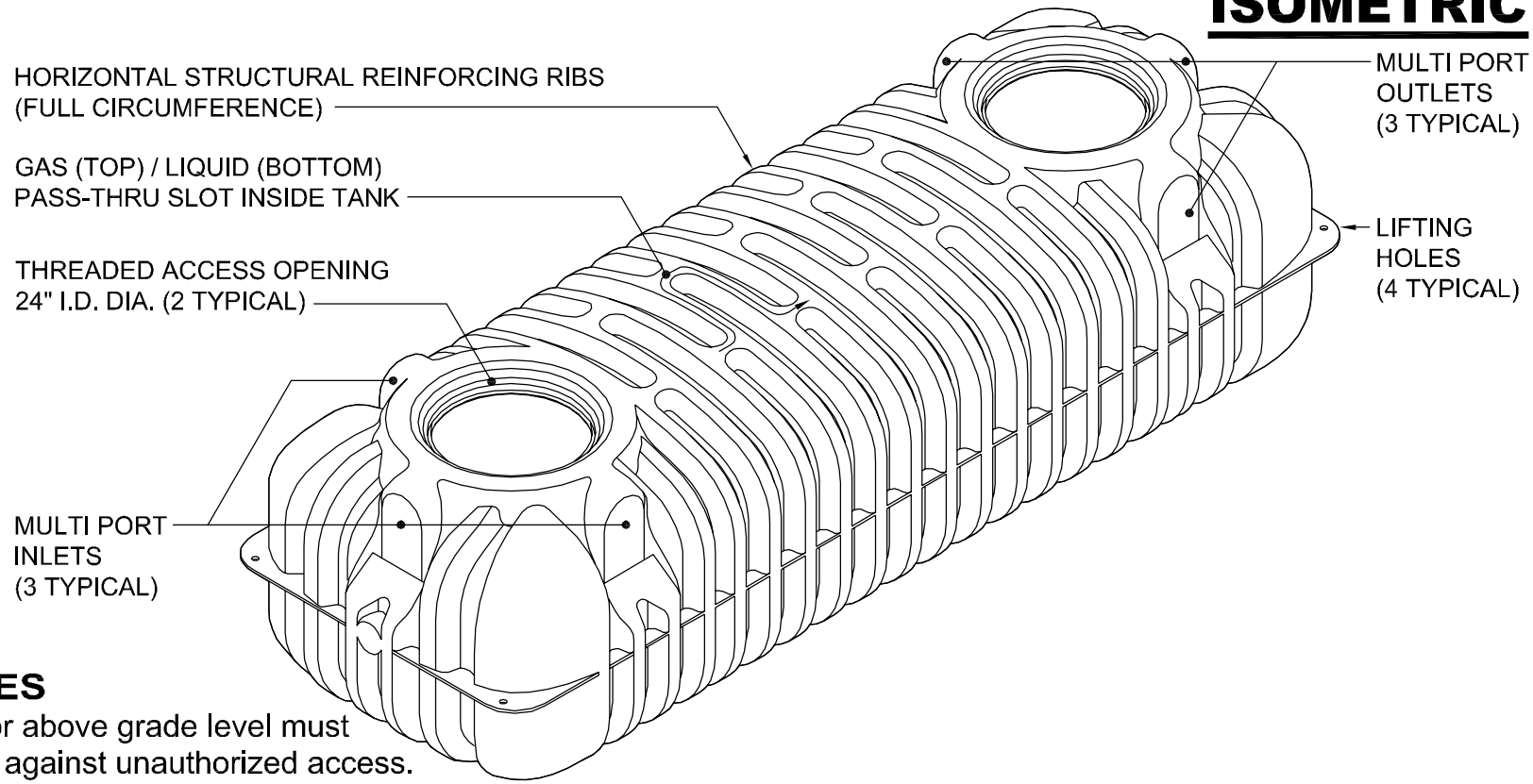


WARNING

## TANK NOTES

1. Access at or above grade level must be secured against unauthorized access.
2. Tank is not rated for vehicular traffic loading.
3. All resin used is compliant with ASTM D 1248 as required by CSA B66 and IAPMO / ANSI Z1000-2007.
4. Tank material of construction is HMW-HDPE.
5. Primary dimensions are in inches
6. Minimum tank wall thickness is 1/4".
7. Labeling will include: manufacturer name, liquid capacity, date, maximum burial depth, and model number.
8. Riser cover contains the following: 6" x 3" warning: "Danger - Do not enter - Poison Gas" - written in English, French & Spanish.
9. Maximum burial depth from manufacturer is 36" unless specifically instructed otherwise by the factory.
10. Models RMT-750, RMT-1060, RMT-1250 and RMT-1500 are all certified to CSA and IAPMO standards.
11. Models RMT-500, RMT-900 and RMT-1000E are compliant with CSA and IAPMO standards.

# NOTES

| | |
|---|---|
| DWG SCALE: | 1:1 |
| PLOT SCALE: | 1:2 |
| SHEET #: | 3 OF 3 |

**ROTH MultiTanK®**
**1500 GALLON / MODEL RMT-1500**

Roth
YOUR ENVIRONMENT IS OUR BUSINESS.

ROTH GLOBAL PLASTICS
One General Motors Drive
Syracuse N.Y. 13206
Call Toll Free 866.943.7256
www.fralo.net

# STAR™ Riser System

**STAR-24L Threaded Cover**
**STAR-24R6 6” Threaded Riser**
**STAR-24R12 12” Threaded Riser**

**ROTH MultiTank® STAR™ Riser Systems** are designed to provide safe and dependable access to your onsite wastewater treatment tanks, whether cast in concrete or retrofitted to an existing tank. Engineered with high-density polyethylene and gasketed watertight connection, the STAR™ Riser System is the quality solution to your access riser needs. ROTH is the proud owner and operator of the world’s largest blow-mold machine. Our patented manufacturing and design processes utilize high molecular weight HDPE to produce onsite wastewater products. With an emphasis on products for the wastewater and environmental industries, ROTH is your innovative partner in business. Our products are engineered for performance over the long term.

## SYSTEM FEATURES

- 24” I.D. threaded riser
- Maximum versatility in the field
- Watertight connection
- Extra-strong flat top design
- Unique anti-slip surface
- Easily secured against unauthorized entry
- Excellent for retrofit or cast-in
- Available in 6 inch and 12 inch

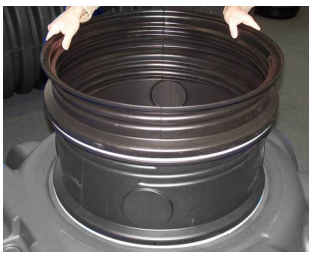

Call to Order Today: 1-888-266-7684
Roth Global Plastics PO Box 245 Syracuse, New York 13211
www.roth-america.com

# STAR™ 24R6 AND 24R12 DIMENSIONS

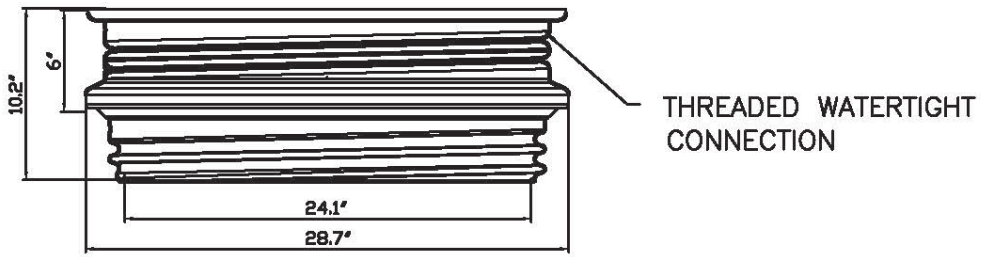


**STAR 6" RISER - MODEL 24R6**

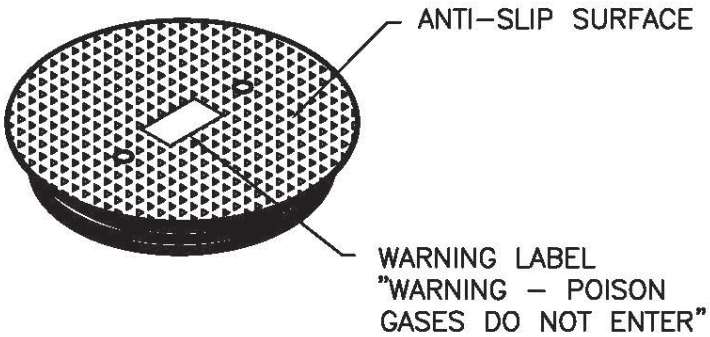


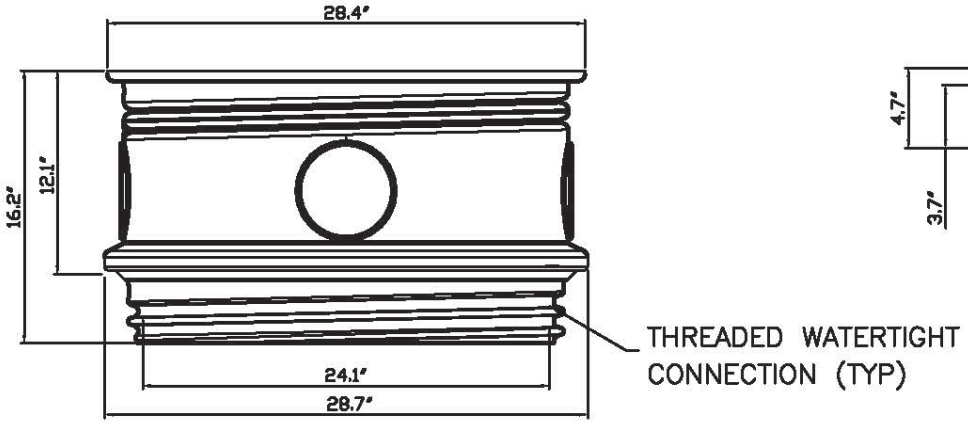


**STAR 12" RISER - MODEL 24R12**

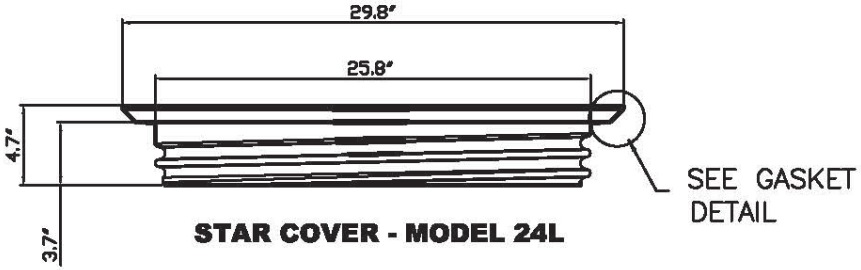


**STAR COVER - MODEL 24L**

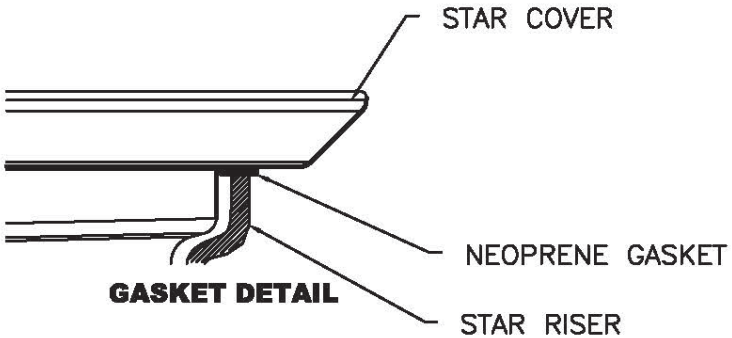


**GASKET DETAIL**

NOTES:
1. COVER SECURED WITH TAMPER RESISTANT STAINLESS STEEL FASTENER OR PADLOCK
2. RISER AND COVER MATERIAL IS HMW–HDPE

Use only STAR stainless steel security seals (Part # SSLOCK) to secure against unauthorized access. Not rated for vehicular traffic loading.
**Warranty:** Roth Global Plastics warranties the STAR™ Riser System for a period of five years from date of purchase against any manufacturing defects, providing the plug cover has been used and installed in accordance with manufacturer's written instructions. Roth will, at its option, repair or replace any plug cover it deems to be defective and Roth's obligations under this warranty are strictly limited to the repair and/or replacement of the defective plug cover. Roth assumes no liability in cases of improper installation or misuse. Roth is not responsible for any resulting contingent liabilities or charges. This warranty applies only to the original plug cover installation.

# Vortex Filter

# Vortex-Fine-Filter WFF 150 and WFF 100

## INSTALLATION AND OPERATING INSTRUCTIONS

- **For Rainwater or process water**
- **Self cleaning capability reduces maintenance**
- **Pedestrian Load Rated**
- **Stainless Steel Filter Screen**
- **Mesh sizes available:**
  **280 micron (standard)**
  **440 micron (upon request)**
- **Square Footage:**
  **WFF100: up to 2,150 $ft^2$**
  **WFF150: up to 5,500 $ft^2$**
- **Suitable for installation above or below ground**


# Rainwater Harvesting

# WISY Vortex Fine Filter
# WFF 150 and WFF 100

**Read these instructions carefully before commencing assembly and installation work and store them in a safe place for future reference.**

## Content

These installation instructions include the following information relating to:

- Area of application
- Guide to components
- General installation hints
- Outdoor installation
- Indoor installation
- Cleaning the filter insert
- Accessories

WFF 150

WFF 100

# Area of application

The WISY Vortex Fine Filter (hereafter referred to as “WFF”) is primarily designed for installation below ground. However, it is also suitable for indoor installation.
Please observe the information and warning notices pertaining to indoor installation in the section headed “Indoor installation” in these instructions.

The best roof areas are pitched roofs of slate, clay tiles, concrete tiles or membrane and sheet metal roofs.

It must be taken into account that “green roofs” retain rainwater. We recommend that a pure, mineral-based substrate is installed beneath the growing medium layer of green roofs connected to a rainwater harvesting system. Substances washed out of roofs covered with bitumen felt can discolour the harvested rainwater. Asbestos-cement roofs are not suitable and must be decontaminated before a rainwater harvesting system is connected.

# Guide to components

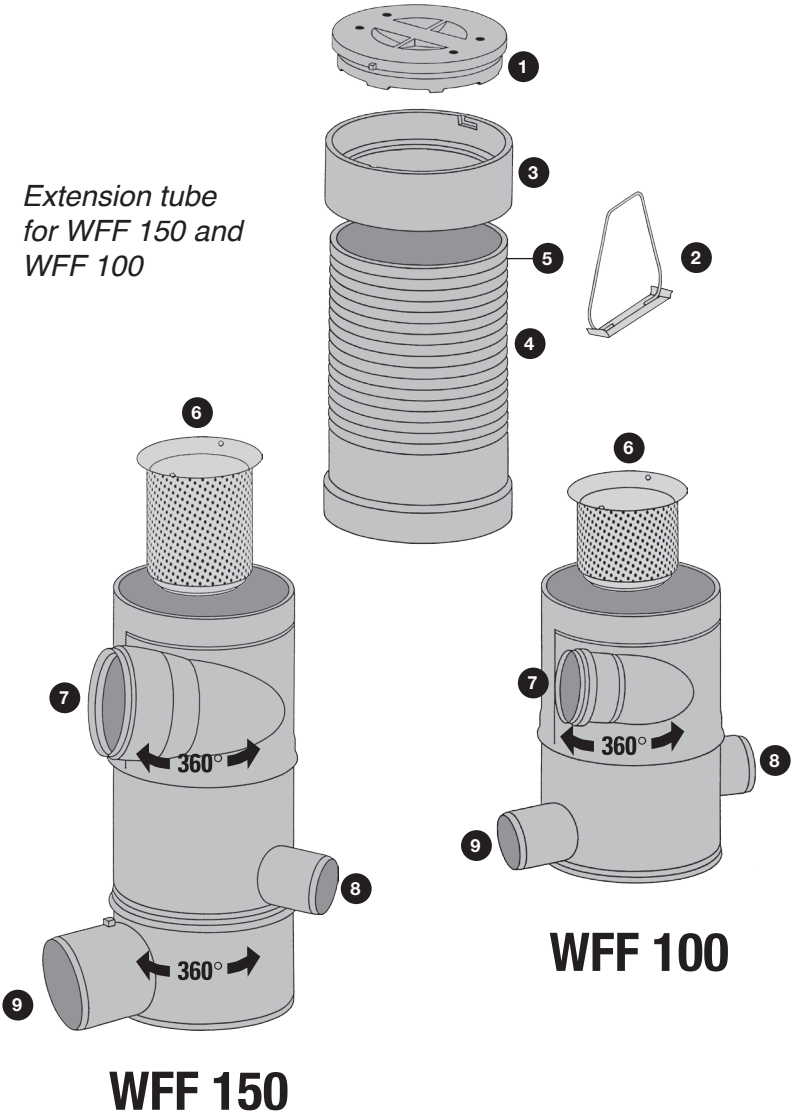

1 **Housing cover**
*with ventilation holes*

2 **Lifting handle**
*(standard length 30 cm)*
*of stainless steel*

3 **Final ring**
*to support cover*

4 **Extension tube**

5 **Parallel cutting lines**

6 **Filter insert**
*of stainless steel,*
*- for fine filtering, mesh size 280 micron (0.28 mm) or 440 micron (0.44 mm)*

7 **Rainwater inlet**
*with bush and seal*

8 **Outlet to storage tank**
*Filtered water*

9 **Drain connection**
*Dirty water*

*The filter insert is made of stainless steel.*

*Housing, housing cover and extension tube are made of polypropylene.*

*DN= Diameter Nominal, internal diameter of a tube*

# Extension tube

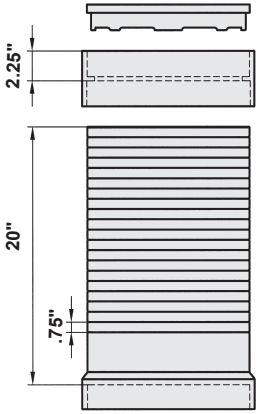


# WFF 150

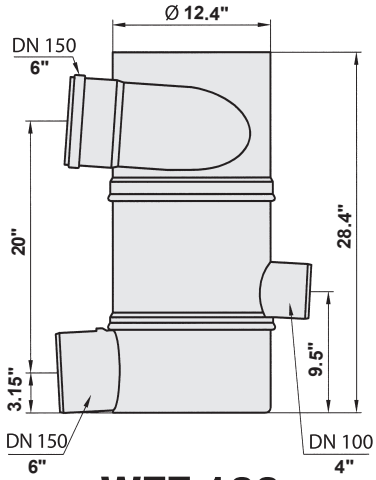


# WFF 100

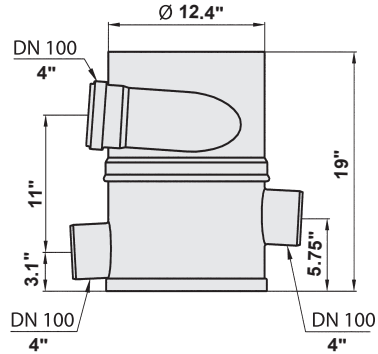

# General installation hints

- Installation and connection sizes can be seen in the dimension drawings. When the inspection opening is raised by use of an extension tube, the additional length must be included in the calculation.

- When an extension tube is installed, it can be cut along the grooves to shorten it to the required length.
  ***IMPORTANT: The final ring (at top) must be firmly bolted to the extension tube in order to provide secure support for the cover.***

- Before installing the filter in existing pipework, make sure that there is room to install the rainwater inlet tube at the following vertical distance from the drain connection: ***WFF 150: 20" (51 cm)***
  ***WFF 100: 11" (28 cm)***

- The vertical distance between the rainwater inlet tube and the connection to the storage tank must be: ***WFF 150: 12.5" (32 cm)***
  ***WFF 100: 8.5" (22 cm)***

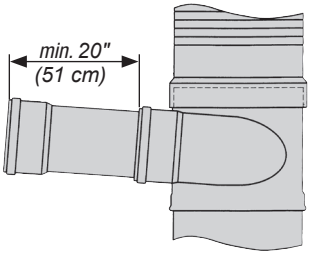


- If the installation is completely new, the required installation depths of incoming and outgoing tubes must be calculated. A ***'settling length'*** of at least 20" (51 cm) in front of the rainwater inlet must be included in the calculation.

- The nominal size of the drain tube must not be smaller than the nominal size of the rainwater inlet tube in order to avoid any constriction to the WFF cross-section.

- If these installation conditions cannot be fulfilled, the WFF cannot be installed. In this case we recommend the WISY standpipe filter collector for installing into the rainwater downpipe.

- To ensure that the WFF can withstand the pedestrian load rating, appropriately compacted subsoil or concrete slab is required.

# Outdoor installation

- Remove the transport packing cardboard from inside the housing.
- Dig a hole of suitable size in the ground.
- Insert the WFF and make the tube connections. Turn the rainwater inlet connection to the required position and seal at point where rainwater inlet is set.
  ***The WFF must be installed exactly vertical and level (use a spirit level).*** An extension tube can be installed if necessary to make the inspection opening flush with ground level.
- The end of the extension tube with the moulded collar is placed directly on the WFF housing and fastened securely by inserting the stainless steel bolts supplied through the pre-drilled holes before the WFF is placed in the ground.
- The saw slits in the extension tube can be cut (with a jig saw) to make the inspection opening flush with ground level.

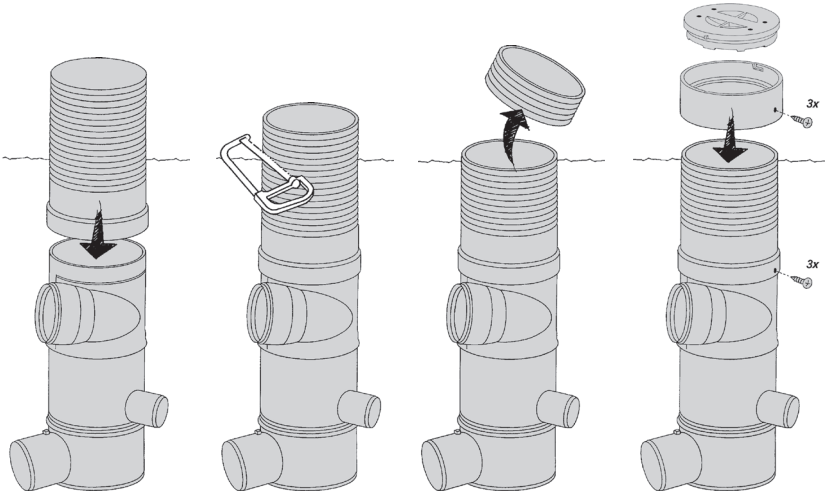


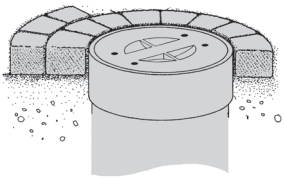

*The final ring enables the paving to be fitted. To remove the cover resting inside the ring, turn it counterclockwise to unlock and then lift out.*

# Indoor installation

- Please observe the ***safety guidelines*** below regarding the indoor installation of the WFF.

- The ***maximum rainwater inflow*** must not exceed 203 gpm (12.8 l/s) for the WFF 150 or 67 gpm (4.2 l/s) for the WFF 100. Use the local rainwater data applicable to your area as a basis for calculating the maximum size of connectable collection surface for your region.

- If the WFF rinsing water outlet is connected to a storm drain, the WFF must always be installed above the ***maximum backwash level*** of the storm drain. If the WFF rinsing water outlet is con-nected to a soakaway, the WFF must always be installed above the maximum backwash level of the soakaway.

- The WFF must be installed ***exactly vertical, stable, and level***. For this reason, it is strongly recommended that the WFF be mounted using the original WISY wall bracket. If other parts are used to secure the WFF, it must be ensured that clamps placed around the WFF housing are installed free of tension and do not subject the WFF housing to deformation pressure.

- The straight tube in front of the rainwater inlet (***'settling length'*** in order to calm down the incoming water) must have a minimum length of 20" (50 cm). The nominal size and the gradient of this straight tube have to correspond to the nominal size and gradient of the WFF rainwater inlet.

- All ***tube connections*** to WFF must be made watertight. After installation, the tightness of the connections should be tested with maximum water flow. As the inflow of rainwater can cause impulses of mechanical stress on the connections, the tube connections have to be secured against slippage (e.g. Fernco rubber couplings are recommended).

- Air moisture can condense on the surfaces of the WFF and the tubes at warm indoor temperatures. It is recommended that these parts be insulated against condensation or alternatively that measures be taken to safely drain off the condensate.


- Depending on the size of the connected collection surface and on specific attributes of individual installations, an excessive volume of rainwater can flow into the filter in the event of extremely heavy rainfall. As a result, rainwater might flow upwards against the WFF cover and escape through the cover.
  ***If this problem occurs, it is urgently recommended that the housing cover be raised through the installation of a WISY extension tube which is sealed water-tight.*** If there is insufficient space available above the WFF, the vent holes in the cover must be sealed and the cover must be assembled with a water-tight seal.

***WARNING NOTICE:***
***The vortex fine filter is not a closed system. In the event of exceptionally heavy rainfall, a defect in the drainage pipes, a blockage in the drainage system, etc., it is possible that water flowing into the filter will escape through the filter inspection opening. We do not accept responsibility for any consequential damage.***

# Cleaning the filter insert

- Remove the filter insert using the lifting handle supplied (standard length 12" (30 cm)).

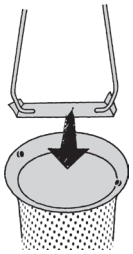

*Set down the lifting handle ...*

*... turn clockwise under the lugs ...*

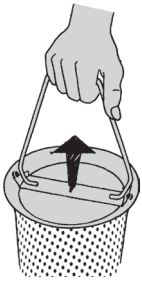

*... and remove*

- We recommend that the filter insert be cleaned every three months. Depending on local conditions, it may be necessary to clean the filter insert at shorter intervals, but it may also be possible to extend the cleaning interval to six months. However, the filter insert must always be cleaned at intervals of six months.

- After cleaning the filter insert, make sure that you remove the lifting handle and store it in a safe place outside the filter. The handle will otherwise obstruct the rainwater inflow and reduce the efficiency of the filter.

  **Experience has shown that cleaning in a dishwasher is always successful, provided that the filter insert is placed in the same position in the dishwasher as it is in the WFF. Cleaning by hand is also possible with a small brush, hot water and a normal dishwashing liquid. For stubborn soiling of the filter mesh (e.g. through industrial pollution in the neighborhood) we recommend the use of a high-pressure cleaner.**

# Accessories

- **Extension tube**
  The scope of supply of the standard version includes an extension tube. An extension tube is available to raise the inspection opening by up to 22" (56 cm) (top edge of final ring). Another tube can easily be attached, but no more than two tubes should be assembled above each other.

- **Lifting handle**
  The lifting handle supplied with the standard version is 12" (30 cm) in length. Lifting handles of 24" (60 cm) or 39" (1 m) in length are also available.

- **Wall bracket**
  WISY provide a stainless steel wall bracket for internal roof drainage pipes in industrial buildings, or for fixing in shafts. This bracket allows the WFF to be safely secured to a vertical internal wall.

- **Concrete rainwater storage tanks**
  A suitable concrete support must be provided to ensure the 5 t load capacity of the filter.

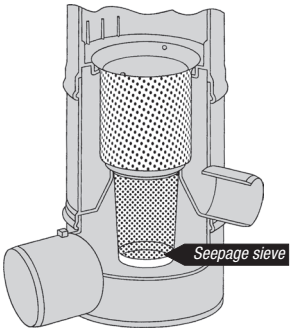


- **Soakaway sieve (maintenance part)**
  If the rinsing water is to be drained into a soakaway system instead of the storm drain, this sieve (mesh size 1,600 micron (1.6 mm)) is added to the filter insert. It collects coarse dirt particles and as a result it must be inspected, emptied and cleaned more often. **If this essential maintenance is not carried out and water damage occurs as a result of a blocked seepage sieve, we cannot accept any liability.**

- **Blind insert**
  The blind insert ensures that rainwater flows directly through to the drain. It is inserted in place of the filter insert whenever the storage tank needs to be put out of operation for the purpose of maintenance or cleaning work.

# Guarantee

The WFF is carefully manufactured and is subjected to strict quality controls designed to ensure that you receive a premium-quality product.

If defects do arise despite this conscientious quality testing regime, then we will provide you with a replacement. However, this does not apply in cases of damage arising from improper installation or use of force.

The product has been purchased from RMS, a specialist retailer authorized by WISY. RMS provides a 5 year guarantee from the date of purchase from the retailer. RMS will replace defective materials within this period.

**RAINWATER MANAGEMENT SOLUTIONS, INC.**
2550 Shenandoah Ave NW
Roanoke, VA 24017
866-375-6750 • www.rainwatermanagement.com

# Smoothing Inlet

# Smoothing inlet

for pre-filtered water

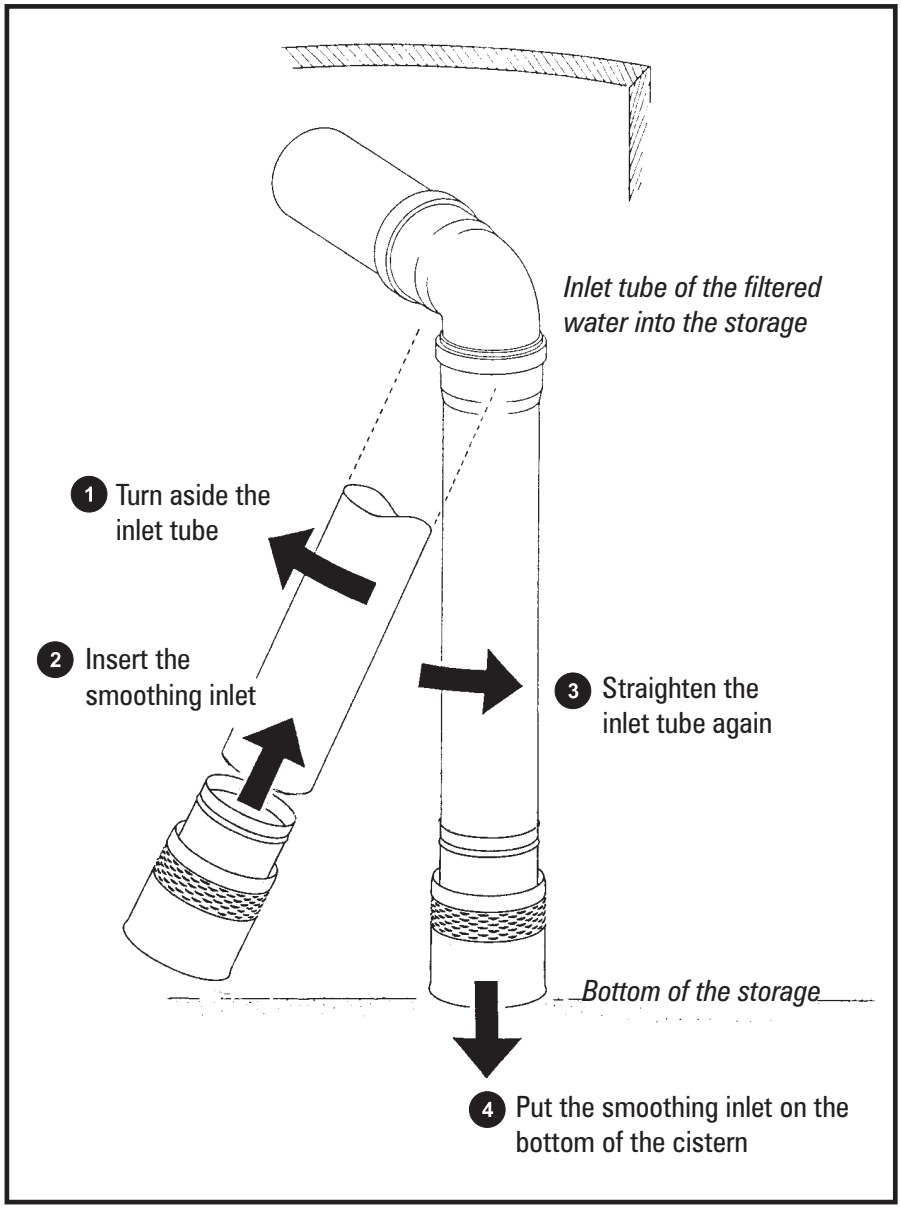


## Overview

The smoothing inlet acts as a brake and slows the incoming water down. The construction pro-vides at the same time a calmed, dispersed water outfl ow upwards into the storage. By this it prevents stirring up the soil sediment of the storage and distributes the fresh rainwater.

## Item No.

4" - EB 0300

8" - EB 0304

## Material

Stainless Steel

## Maintenance

None

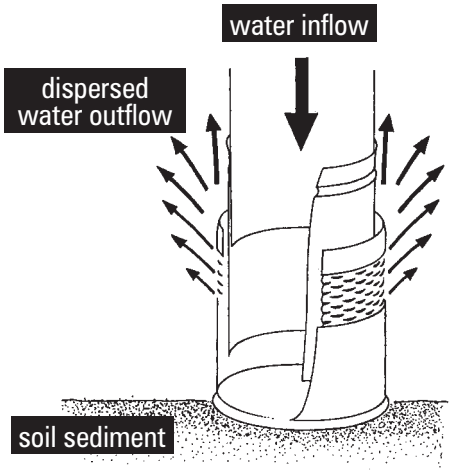


## Installation

The Smoothing Inlet is designed to connect to an S&D or SDR 35 pipe from the vortex filter inside the rainwater storage tank. The inlet pipe should come through the tank wall and affixed with an elbow to point the end of the pipe toward the bottom of the tank. The downward inlet pipe should be cut approximately 3" short of the bottom. Swivel the inlet pipe to the side and slide on the Smoothing Inlet to the lip. Then return the pipe back to the perpendicular position with the Smoothing Inlet sitting on the bottom of the tank. The Smoothing Inlet does not need not be glued or fastened to the inlet pipe.

*Note:*
*The Smoothing Inlet and overflow of a tank should always be on opposite ends to create the proper flow of the harvested rainwater to ensure the highest quality water available.*
*It is recommended that the inlet pipe be slid into the Smoothing Inlet sleeve prior to gluing the inlet pipe to the elbow.*


Rainwater Management Solutions, Inc.
2550 Shenandoah Ave. NW
Roanoke, Virginia 24017 USA
540-375-6750 Toll Free: 866-653-8337
www.rainwatermanagement.com

# Overflow Device

# Multi-siphon Overflow Device

## INSTALLATION AND OPERATING INSTRUCTIONS

### Overview

The Multi-Siphon Overflow Device (US 1002) serves as an overflow device by siphoning the water and skimming the surface debris out of the storage vessel. This unit prevents storm drain odors from reaching the storage vessel and comes with vermin protection and back-flow prevention. The brace pipe prevents tilting or tipping when the unit is full of water (12.5 lbs) and has a volume of 1.5 gallons.

### Materials

Housing: Impact-Resistant ABS Plastic
Passive Vermin Guard: Stainless Steel

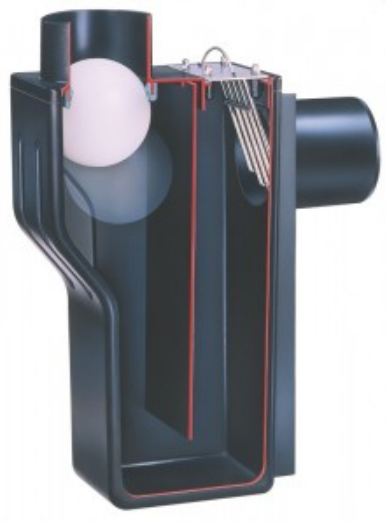

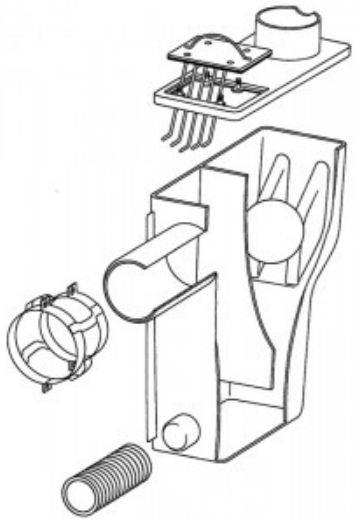

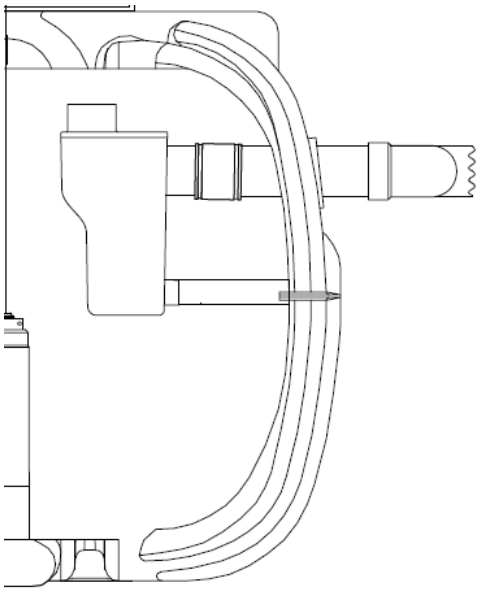

### Installation

The Multi-Siphon Overflow Device is attached to a 4” bulkhead in the tank for overflow. This fitting is installed by the contractor if using a poly tank or should be specified in a custom-ordered fiberglass, galvanized or concrete tank. The device is mounted to the inside of the tank and secured to the 4” fitting with the supplied protective clamp. The supplied support strut is inserted in the small dimple in at the bottom of the device on the same side as the protective clamp. The other end of the support strut rests against the inside of the tank. This strut is designed to support the weight of the unit when full of water (12.5 lbs).

*Note: The Multi-Functional Overflow device should be positioned on the opposite end of the tank from the inlet to allow for the skimming action to have a full effect on the water in the tank.*

### Maintenance

None

Rainwater Management Solutions, Inc.
2550 Shenandoah Ave. NW
Roanoke, Virginia 24017 USA
540-375-6750 Toll Free: 866-653-8337
www.rainwatermanagement.com

# Submersible Pump

Clean Water Submersible Pump

# GRUNDFOS **SBA**

The SBA clean water submersible pump is designed for use in residential applications and especially suitable for rainwater applications and wells. When installed underground in a collection tank or well, noise is not an issue. The complete all in one plug-and- pump unit comes with an integrated control unit – eliminating the need for an external pump controller. Once installed and connected, all you need to do is switch on the pump.

## KEY FEATURES AND BENEFITS

- Noiseless operation: Emits no noise when submerged and is therefore a noiseless alternative to non-submersible pumps
- High reliability: Built from composite and stainless steel materials that are resistant to corrosion. The pump has a stainless-steel strainer that prevents large particles from entering the pump housing. A Grundfos float switch prevents air from entering the system because of dry running
- Integrated protection: The pump offers thermal overload protection. Built-in thermal protection immediately stops the pump if it overheats. The pump automatically restarts when it has returned to normal temperature
- Floating suction strainer: The model with floating suction strainer always draws the water from just below the water surface where the water is clean and free from solid particles. The SBA features integrated dry-running protection. All pumps are available with float switches for low water stop
- SBA pumps are available in two main variants, with or without float switch. With integrated suction strainer (1 mm mesh), or with side inlet/flexible suction hose with floating suction strainer (1 mm mesh)
- Complete all-in-one unit. It comes with an integrated control unit—eliminating the need for an external pump controller
- Plug-and-pump solution. Once installed and connected to the piping, all you need to do is switch on the pump

**APPLICATIONS**

- Rainwater
- Private wells

be
think
innovate

GRUNDFOS

## TECHNICAL DATA

| SBA | |
|---|---|
| **FLOW, Q:** | max. 13 gpm |
| **HEAD, H:** | max. 148 ft |
| **DEPTH:** | max. 33 ft |
| **LIQUID TEMPERATURE:** | 32°F to 104°F |

| | |
|---|---|
| **97896335** | SBA3-45 AW 1x110-120V 60Hz 45ft NEMA |
| **97896333** | SBA3-45 A 1x110-120V 60Hz 45ft NEMA |
| **97896329** | SBA3-35 A 1x110-120V 60Hz 45ft NEMA |

## PERFORMANCE DATA

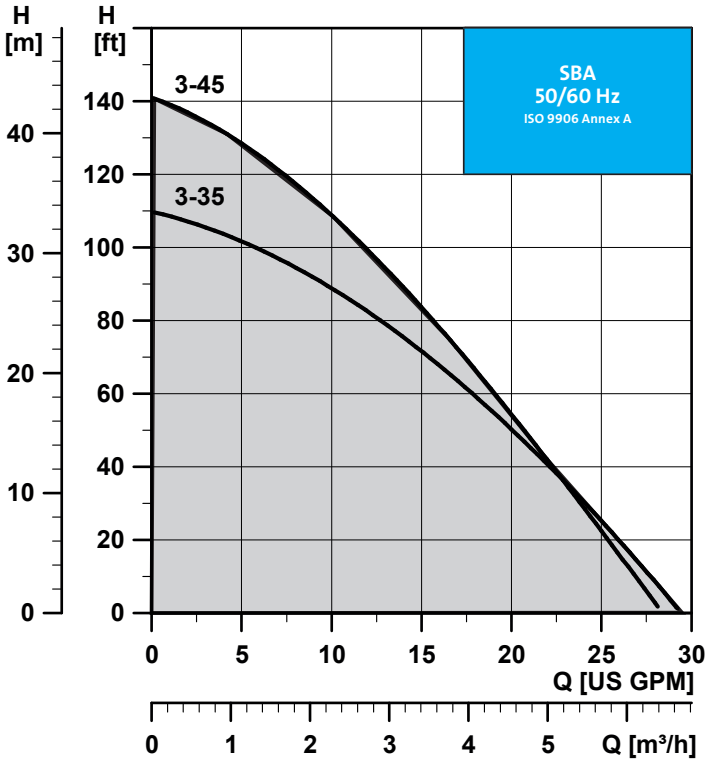




Visit grundfos.us/pei to learn more about Department of Energy (DOE) pump energy index (PEI) requirements and PEI ratings on specific Grundfos models.

**Grundfos Americas**
Brookshire, TX 77423

www.grundfos.us
www.grundfos.ca
www.grundfos.mx

GRUNDFOS

# SBA

TM06 1310 2014, TM06 1311 2014

**Fig. 1** SBA pumps

## Product description

SBA is a complete all-in-one submersible booster pump for pumping clean water. The pump is especially suitable for rainwater applications and small private wells. It comes with an integrated control unit eliminating the need for an external pump controller.

With SBA it is literally a matter of "plug and pump". Once the pump is installed and connected to the piping, all you need to do is switch it on. The result is a reliable solution and greatly reduced installation costs.

The pump is available in two main versions:

- with integrated suction strainer (1 mm mesh)
- with side inlet/flexible suction hose with floating suction strainer (1 mm mesh).

Both variants are available with or without float switch. The float switch offers stop at low water level, preventing surface fragments from entering the strainer.

The pump can be identified by means of below table:

| Pump version | Model |
|---|---|
| Integrated suction strainer with float switch | A |
| Integrated suction strainer without float switch | M |
| Side inlet with float switch | AW |
| Side inlet without float switch | MW |

## Features and benefits

### Noiseless operation

SBA emits no noise when submerged which makes it a noiseless alternative to non-submersible pumps.

### High reliability

SBA is built of composite and stainless-steel materials resistant to corrosion. The stainless-steel strainer prevents large particles from entering the pump housing.

### Integrated protection

SBA features integrated dry-running protection.
All pumps are available with float switch for low water stop.

### Floating suction strainer

The SBA model with floating suction strainer always draws the water from just below the water surface where the water is clean and free from solid particles.

### Automatic restart

The SBA model with float switch automatically restarts when water is added. The SBA model without float switch will attempt to restart every 24 hours.

### Overheat protection

Thanks to the built-in thermal protection, the pump stops immediately in case of overheating. Having cooled down, the pump automatically restarts when reaching normal temperature.

### Longer life

The Grundfos float switch prevents air from entering the system as a result of dry running.

## Performance range

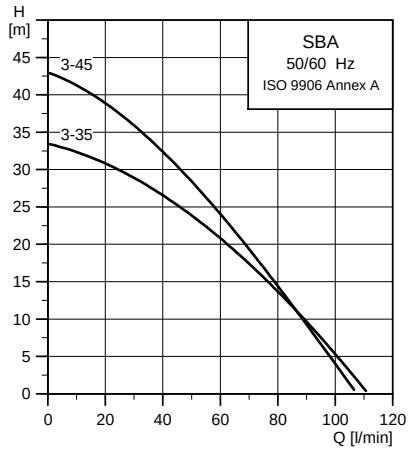


TM05 7437 1013

## Selection guide

### General recommendation

Pump sizes recommended for the most typical applications:

| Application | Recommended pump |
|---|---|
| One-storey house: For toilet flushing, washing machine, car washing and garden watering | SBA 3-35 |
| Two-storey house: For toilet flushing, washing machine, car washing and garden watering | SBA 3-45 |

## Dimensions

**SBA model with integrated suction strainer**

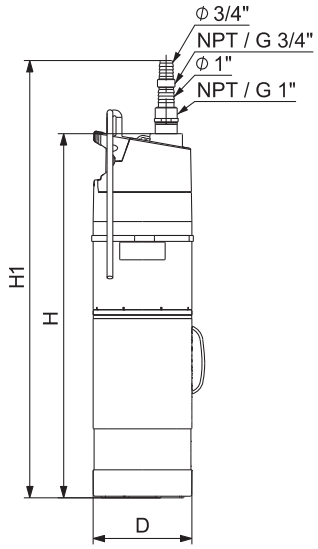


**SBA model with floating suction strainer**

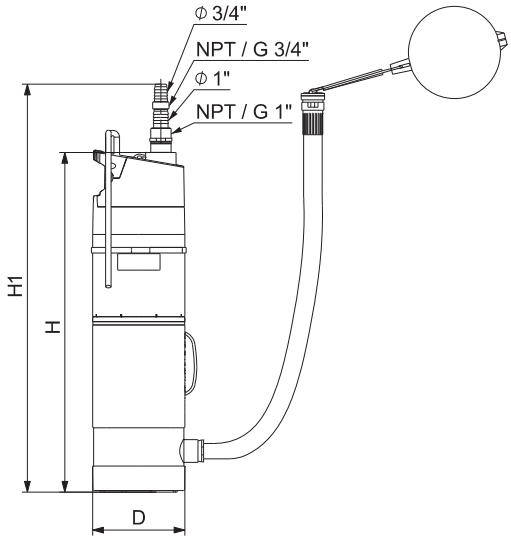


TM05 4804 2712 - TM05 4805 2712

* NPT thread only applies to 60 Hz models.

| Pump type | H | | H1 | | D | |
|---|---|---|---|---|---|---|
| | [mm] | [inch] | [mm] | [Inch] | [mm] | [inch] |
| SBA 3-35 | 528 | 20.79 | 621 | 24.45 | 150 | 5.91 |
| SBA 3-45 | 553 | 21.77 | 646 | 25.43 | 150 | 5.91 |

Length of supply cable: 15 metres (49.21 feet)

Max. installation depth: 10 metres (32.81 feet)

## Electrical data

Insulation class: IP68.

Enclosure class: B.

| Pump type | Voltage [V] | Frequency [Hz] | P1 [kW] | P1 [hp] | $I_{1/1}$ [A] | n [$min^{-1}$] |
|---|---|---|---|---|---|---|
| SBA 3-35 | 1 x 220 - 240 | 50 | 0.80 | 1.07 | 3.8 | 2800 |
| SBA 3-45 | 1 x 220 - 240 | 50 | 1.05 | 1.41 | 4.8 | 2800 |
| SBA 3-35 | 1 x 110 - 120 | 60 | 0.91 | 1.22 | 8.6 | 3400 |
| SBA 3-45 | 1 x 110 - 120 | 60 | 1.07 | 1.43 | 9.9 | 3400 |
| SBA 3-35 | 1 x 220 - 240 | 60 | 0.74 | 0.99 | 3.4 | 3400 |
| SBA 3-45 | 1 x 220 - 240 | 60 | 0.90 | 1.20 | 4.1 | 3400 |

## Cut-in pressure

| Pump | Cut-in pressure [bar] | Max. height between pump and tap* [m] |
|---|---|---|
| SBA 3-35 | 1.5 | 13 |
| SBA 3-45 | 2.2 | 20 |

* Install the pump so that the height between the pump and the highest tapping point does not exceed the heights shown.

## Construction

| Component | Material |
|---|---|
| Cover | Polypropylene (PP30GF) |
| Lifting eye | Stainless steel (EN 1.4301/AISI 304) |
| Impeller | Polypropylene (PPO20GF) |
| Chamber | Polypropylene (PPO20GF) |
| Shaft with rotor | Stainless steel (EN 1.4401/AISI 416) |
| Wetted part of shaft | Stainless steel (EN 1.4301/AISI 304) |
| Strainer[1] | Stainless steel (EN 1.4301/AISI 304) |
| Inlet collar[2] | Stainless steel (EN 1.4301/AISI 304) |
| Cable | Neoprene H07RN-F |
| O-rings | NBR |
| Pump housing | Polypropylene (PP30GF) |
| Base | Polypropylene (PP30GF) |
| Stator housing | Stainless steel (EN 1.4301/AISI 304) |

1 Only fitted on models with integrated suction strainer.
2 Only fitted on models with floating suction strainer.

## Approvals and markings

SBA has the following approvals and markings:

- EAC
- CSA approval for Canada and USA
- C-tick
- SASO
- CE.

**98279580** 1014
ECM: 1142329

Subject to alterations.



**GRUNDFOS A/S** . DK-8850 Bjerringbro . Denmark
Telephone: +45 87 50 14 00
www.grundfos.com

# Bulkhead Fittings

# POLYPROPYLENE BULKHEAD FITTINGS / EPDM OR VITON GASKETS

Norwesco's polypropylene fittings come standard with an EPDM gasket. Viton gaskets are available as an option when EPDM may not be suitable for your application. The 2" stainless steel bulkhead fitting comes standard without a gasket.

| DESCRIPTION | HOLE SIZE REQUIRED IN TANK FOR INSTALLATION | ITEM CODE | PART NO. |
|---|---|---|---|
| ½" Heavy duty double threaded polypropylene fitting | 1 7/16" | A | 62834 |
| ¾" Double threaded polypropylene fitting | 1 7/16" | A | 60401 |
| EPDM gasket for ½" and ¾" (62834 and 60401) | | | 60402 |
| Type B Viton gasket for ½" and ¾" (62834 and 60401) | | | 60360 |
| ¾" Heavy duty double threaded polypropylene fitting | 1⅝" | A | 62798 |
| EPDM gasket ¾" (62798) | | | 62799 |
| Type B Viton gasket for ¾" (62798) | | | 62800 |
| 1" Double threaded polypropylene fitting | 2¼" | A | 60427 |
| 1¼" Double threaded polypropylene fitting | 2¼" | A | 60403 |
| 1¼" Anti-vortex polypropylene fitting | 2¼" | D | 63065 |
| EPDM gasket for 1" and 1¼" (60427, 60403 and 63065) | | | 60404 |
| Type B Viton gasket for 1" and 1¼" (60427, 60403 and 63065) | | | 60361 |
| Anti-vortex adapter for 1¼" (60403) | | | 62398 |
| 1½" Standard duty double threaded polypropylene fitting | 2⅜" | A | 63931 |
| EPDM gasket for 1½" (63931) | | | 63938 |
| Type B Viton gasekt for 1½" (63931) | | | 63939 |
| 1½" Double threaded polypropylene fitting | 3" | A | 60124 |
| Siphon tube, 1½" x 4 15/16" long | | | 63682 |
| Siphon tube, 1½" x 12" long | | | 63279 |
| 2" Double threaded polypropylene fitting | 3" | A | 60405 |
| 2" Double threaded 316 stainless steel fitting, less gasket | 3" | | 61767 |
| EPDM gasket for 1½" and 2" (60124, 60405, 63481 and 61767) | | | 60406 |
| Type B Viton gasket for 1½" and 2" (60124, 60405, 63481 and 61767) | | | 60523 |
| 2" Standard duty double threaded polypropylene fitting (maximum tank wall thickness = ⅜") | 3" | E | 63481 |
| 2" Heavy duty double threaded polypropylene fitting | 3¼" | B | 63683 |
| EPDM gasket for 2" (63683) | | | 60336 |
| Type B Viton gasket for 2" (63683) | | | 60008 |
| Siphon tube, 2" short | | | 60335 |
| Siphon tube, 2" x 12" long | | | 63262 |
| 2" MPT vent cap with poly screen | | | 63266 |
| 2" MPT vent cap, anti-vortex, without screen | | | 63316 |
| Anti-vortex adapter for 2" bulkhead fitting | | | 62399 |
| 2" Polypropylene dust plug | | | 60021 |
| 2" Self-aligning double threaded polypropylene fitting (designed to install in dome of vertical tank above the liquid level) | 4½" | | 63668 |
| EPDM gasket for 2" self-aligning (63668) | | | 60331 |
| Type B Viton gasket for 2" self-aligning (63668) | | | 60351 |
| 3" Double threaded polypropylene fitting (hex nut as shown in photo C) | 4½" | C | 62299 |
| EPDM gasket for 3" (62299) | | | 60331 |
| Type B Viton gasket for 3" (62299) | | | 60351 |
| 2" Polypropylene reducer for 3" | | | 60330 |
| Siphon tube, 3" short | | | 60327 |
| Siphon tube, 3" x 12" long | | | 63263 |
| 3" MPT vent cap with poly screen | | | 63845 |
| 4" Double threaded polypropylene fitting (hex nut as shown in photo C) | 5¾" | | 62171 |
| EPDM gasket for 4" (62171) | | | 62785 |
| Type B Viton gasket for 4" (62171) | | | 62786 |
| Siphon tube for 4" | | | 62714 |

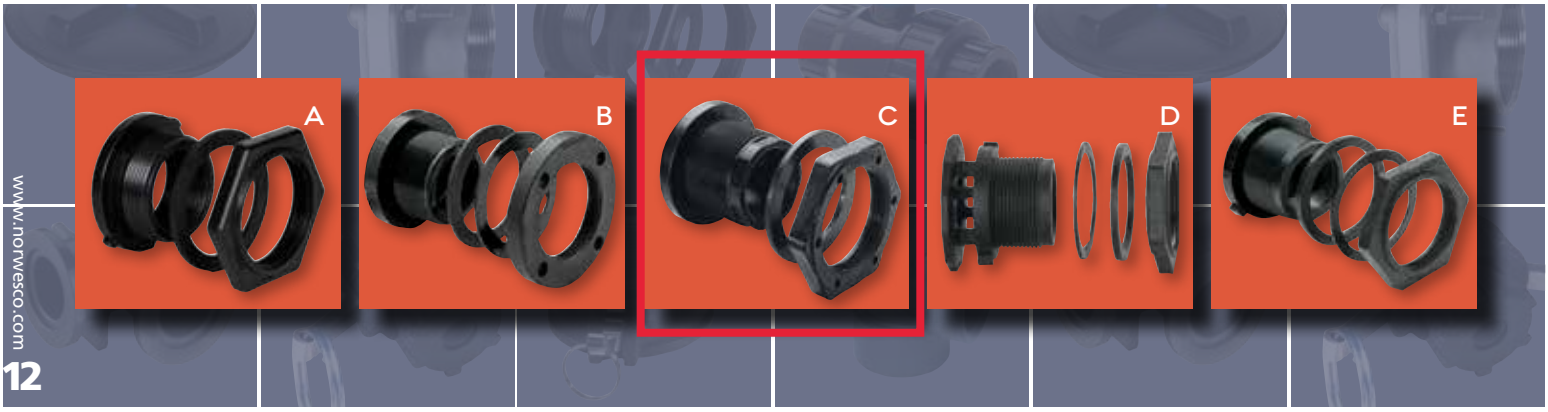

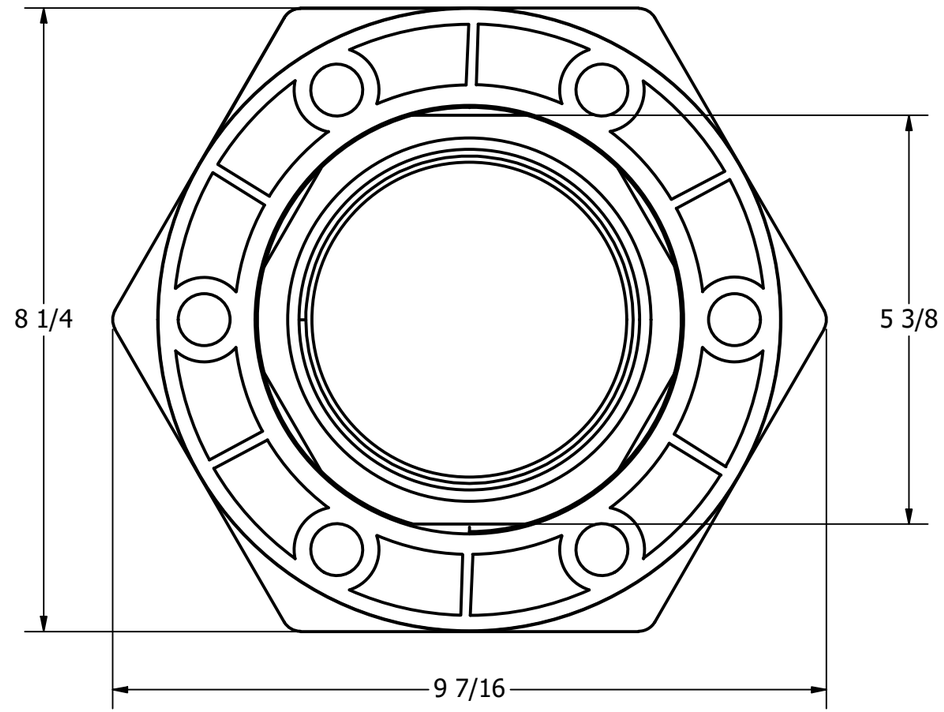


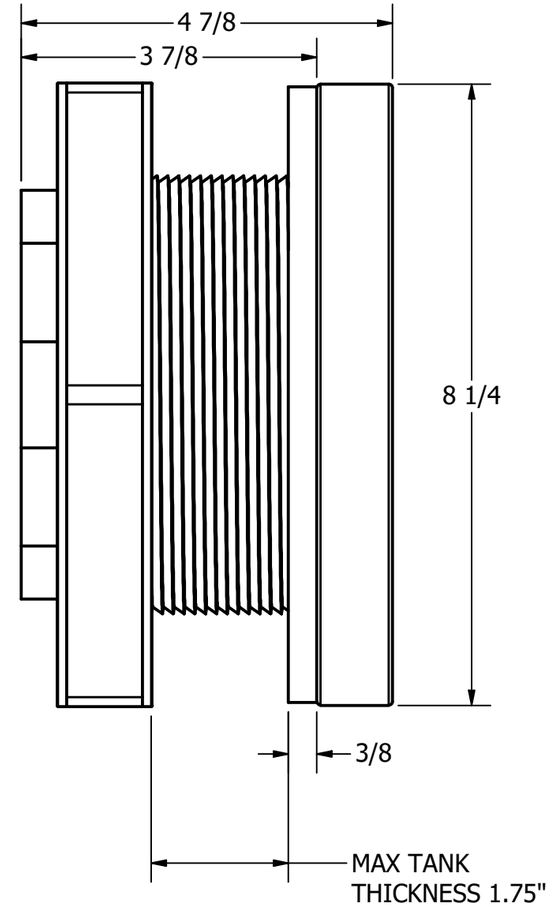


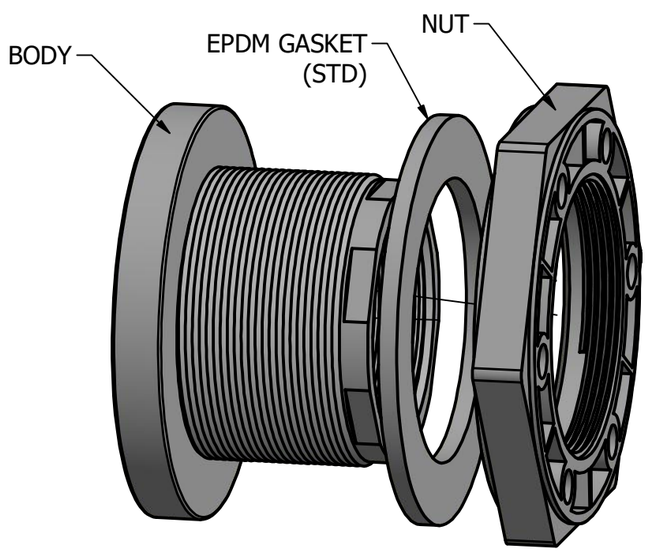


| | | |
|---|---|---|
| DRAWN Liv Oltean | 5/8/2019 | NORWESCO, INC. SAINT BONIFACIUS, MN |
| CHECKED | | TITLE 4 IN DOUBLE THREADED PP FITTING WITH EPDM GASKET |
| QA | | |
| MFG | | |
| APPROVED | | SIZE B / DWG NO 62171 / REV |
| | | SCALE: / SHEET 1 OF 1 |

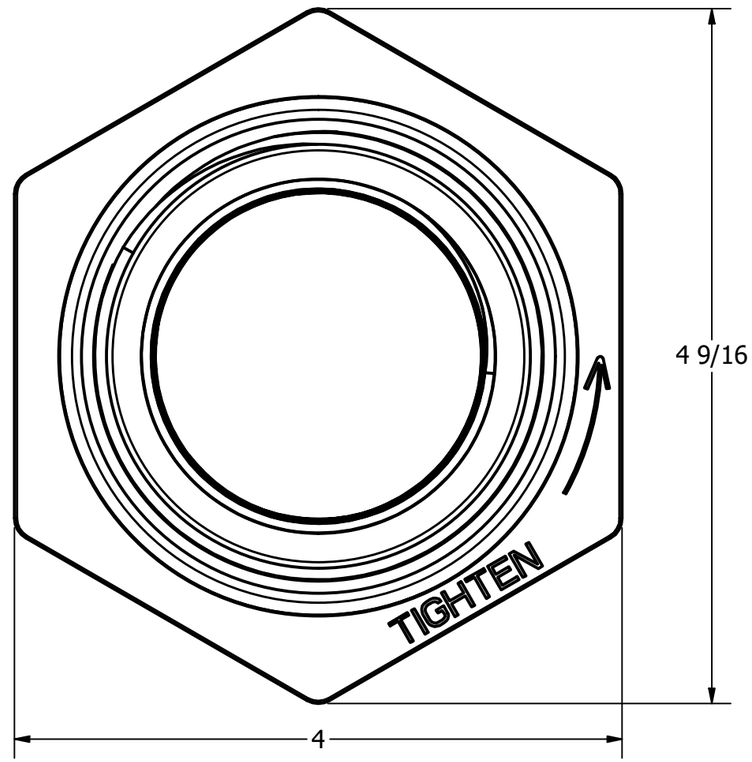


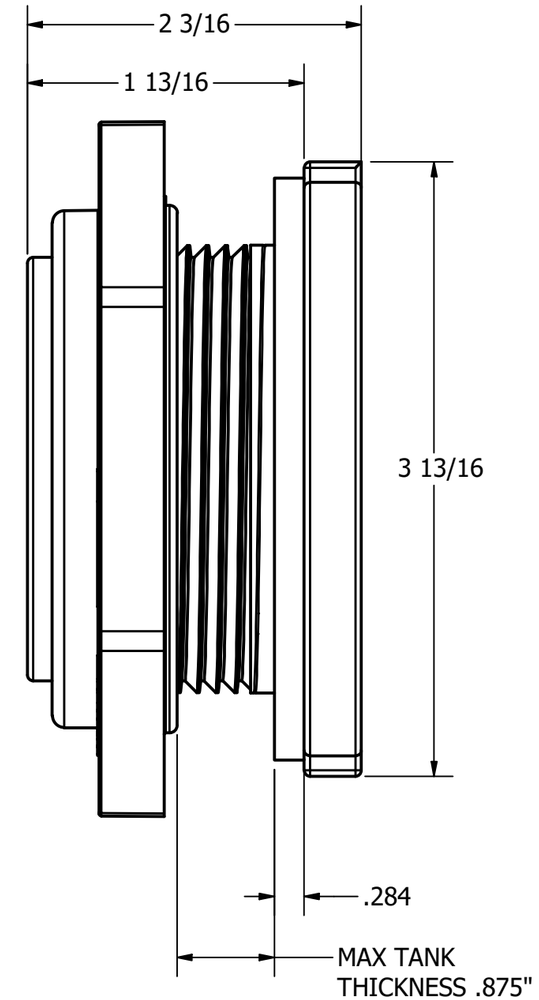


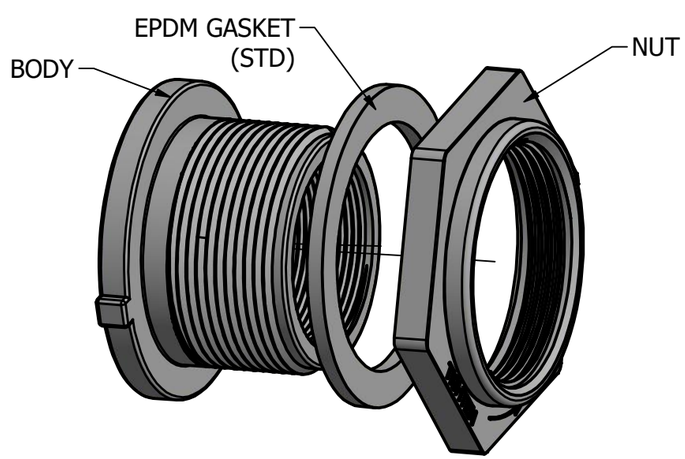


| | | |
|---|---|---|
| DRAWN Liv Oltean | 5/8/2019 | NORWESCO, INC. SAINT BONIFACIUS, MN |
| CHECKED | | TITLE 2" DOUBLE THREADED PP FITTING W/EPDM GASKET |
| QA | | |
| MFG | | |
| APPROVED | | SIZE B / DWG NO 60405 / REV |
| | | SCALE: / SHEET 1 OF 1 |

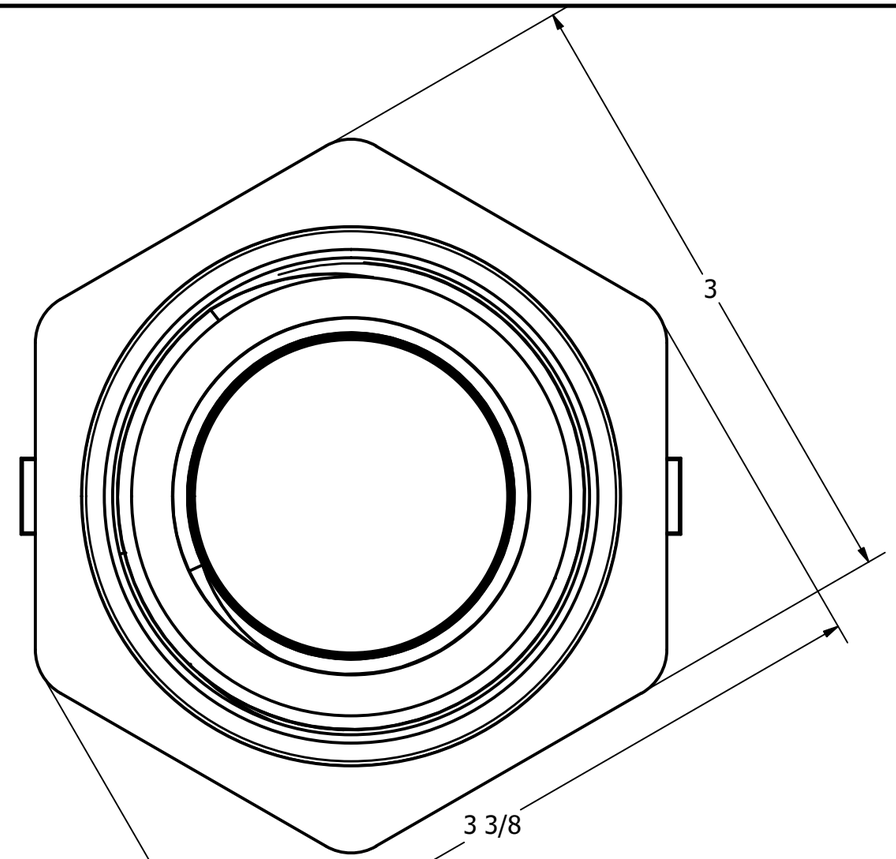


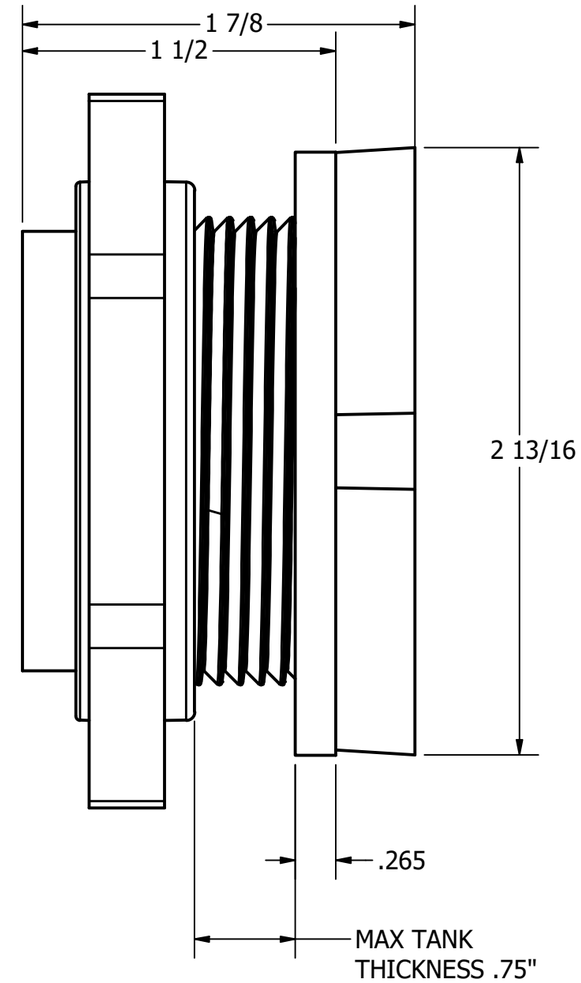


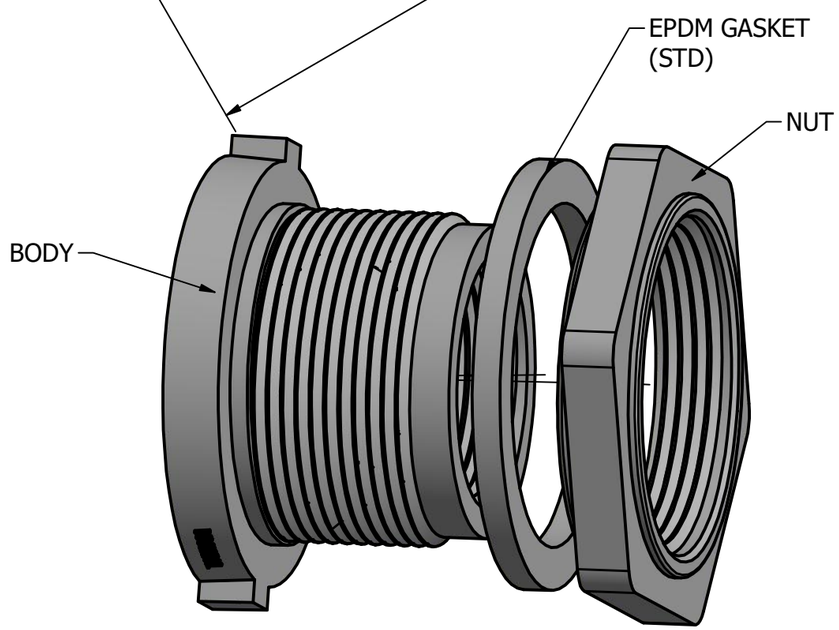


| | | |
|---|---|---|
| DRAWN Liv Oltean | 5/16/2019 | NORWESCO, INC. SAINT BONIFACIUS, MN |
| CHECKED | | TITLE |
| QA | | 1 1/4" DOUBLE THREADED PP FITTING W/EPDM GASKET |
| MFG | | |
| APPROVED | | SIZE B / DWG NO 60403 / REV |
| | | SCALE: 1/16 / SHEET 1 OF 1 |

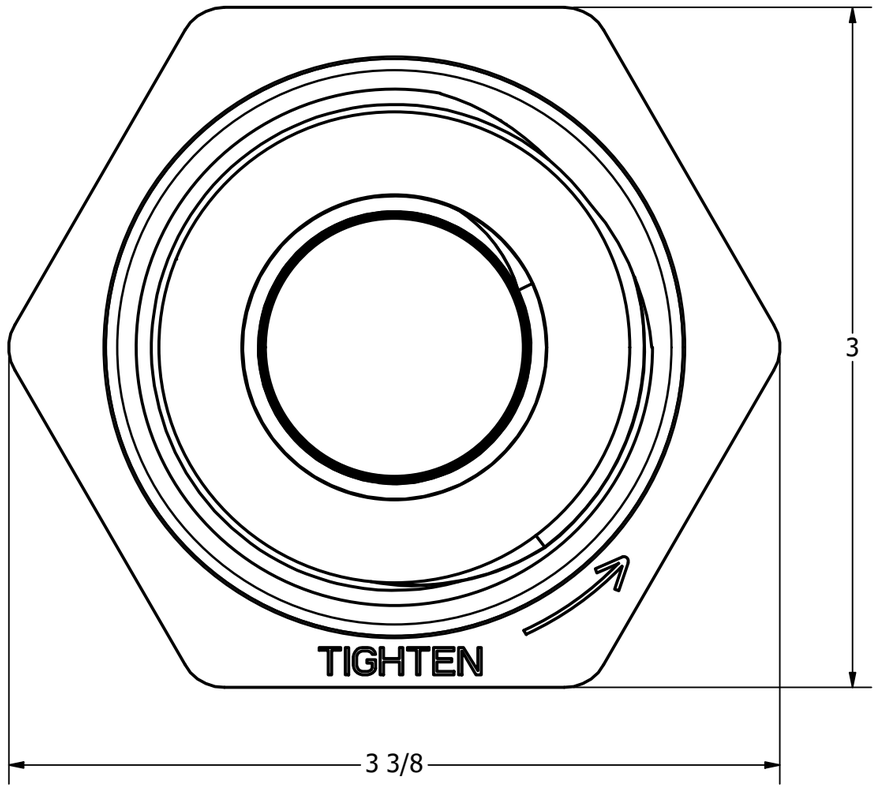


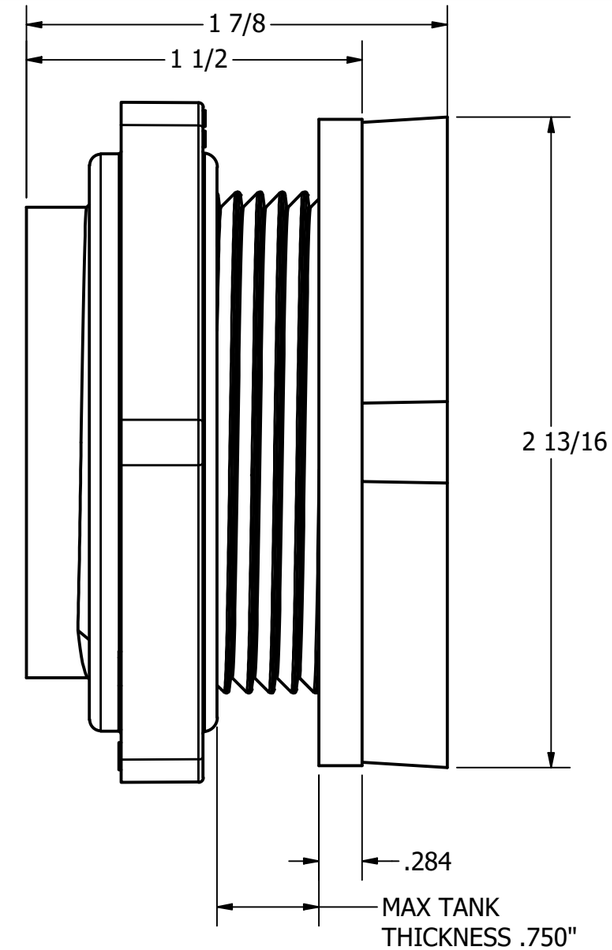


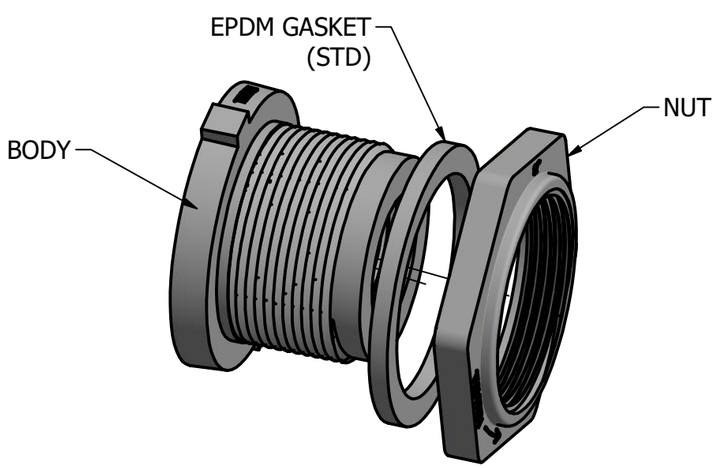


| | | |
|---|---|---|
| DRAWN Liv Oltean | 5/16/2019 | NORWESCO, INC. SAINT BONIFACIUS, MN |
| CHECKED | | TITLE 1" DOUBLE THREADED PP FITTING W/EPDM GASKET |
| QA | | |
| MFG | | |
| APPROVED | | SIZE B / DWG NO 60427 / REV |
| | | SCALE: 1/16 / SHEET 1 OF 1 |